CBF s.r.l. - Via Caboto, 3 - 36075 Montecchio Maggiore (VI)
Tel. 0444 499141 / 0444 499143 - Fax 0444 499145
e-mail: info@cbfhydraulic.com - http://www.cbfhydraulic.com

Valvola elettrica direzionale 2/2 a cartuccia
2/2 solenoid directional valve, cartridge type
mod. EV-10-2X-C

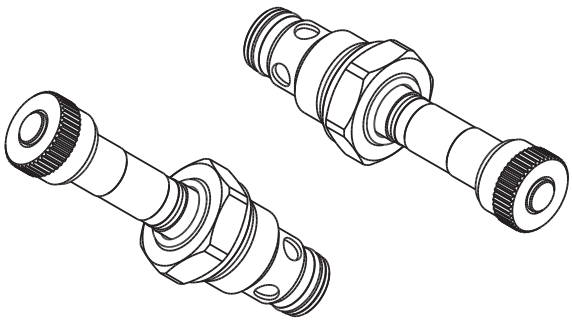

EV1020-C	EV1021-C	*EV1020M-C*	*EV1021M-C*
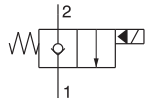	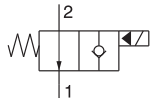	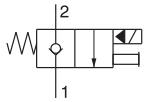	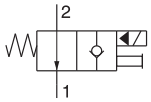
EV1022-C	**EV1023-C**	***EV1022M-C***	***EV1023M-C***
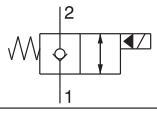	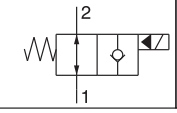	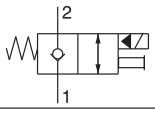	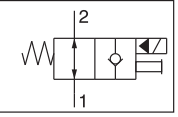

Portata massima *Max flow*	70 l/min *18.5 gpm*	
Pressione massima *Max pressure*	EV-10-2X-C	250 bar *3600 psi*
	EV-10-2X-C-Y (Su richiesta) (Upon request)	350 bar *5000 psi*
Coppia di serraggio *Installation torque*	45 ÷ 50 Nm *33 ÷ 37 lbf ft*	

Dati e tarature ottenuti usando olio a 30 cSt a 50°C. Viscosità raccomandate 10 ÷ 420 cSt. Temperature di lavoro -20÷+90 °C. Filtrazione assoluta 25 µ.
Performances and calibrations are carried out by using hydraulic oil with 30 cSt viscosity at 50°C (122 F). Recommended viscosity 10 ÷ 420 cSt, working temperature -20÷+90 °C (-4 F÷194 F). Absolute filtration 25 µ.

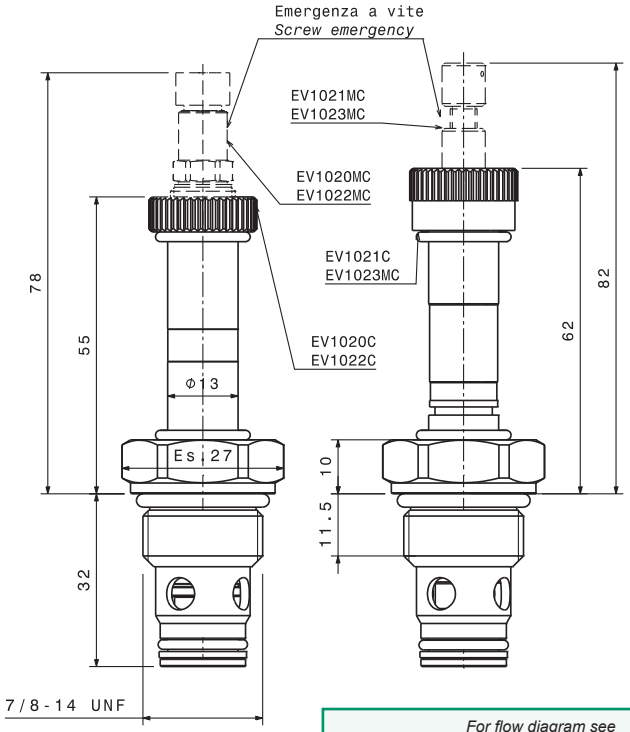

For flow diagram see
PRESSURE DROP SOLENOID VALVE (3)

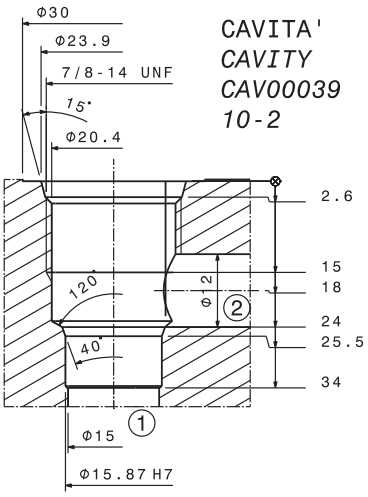

Perdite interne: max. 5 gocce/minuto a 250 bar
Internal leakage: max. 5 drops/min at 250 bar

**
Version "Y" NA normally open is availiable only with MS emergency

Emergenze disponibili su richiesta
Emergency availiable upon request

Normally closed

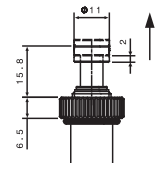

In tiro con ritorno a molla
To pull with spring return

Normally open

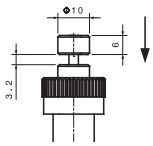

In spinta con ritorno a molla
To push with spring return

**
M standard emergency screw type
MT pull (only for normally closed)
MS push (only for normally open)

Sigla di ordinazione / Ordering code

EV-10-20 — C* — - / Y

- Pressione massima 250 bar
  Max Pressure 250 bar
- Y Pressione massima 350 bar
  Max pressure 350 bar

Modello/*Type*

EV1020	**EV1021**
EV1022	**EV1023**
EV1020M**	**EV1021M****
EV1022M**	**EV1023M****

* Bobina venduta separatamente mod. S1
* *Coil sold separately mod. S1*

I dati non sono impegnativi, **CBF** si riserva di apportare modifiche senza preavviso.
*The specifications are not binding, **CBF** reserves the right to introduce modifications without notice.*